中华人民共和国
工程设计综合资质
甲级证书A112000022

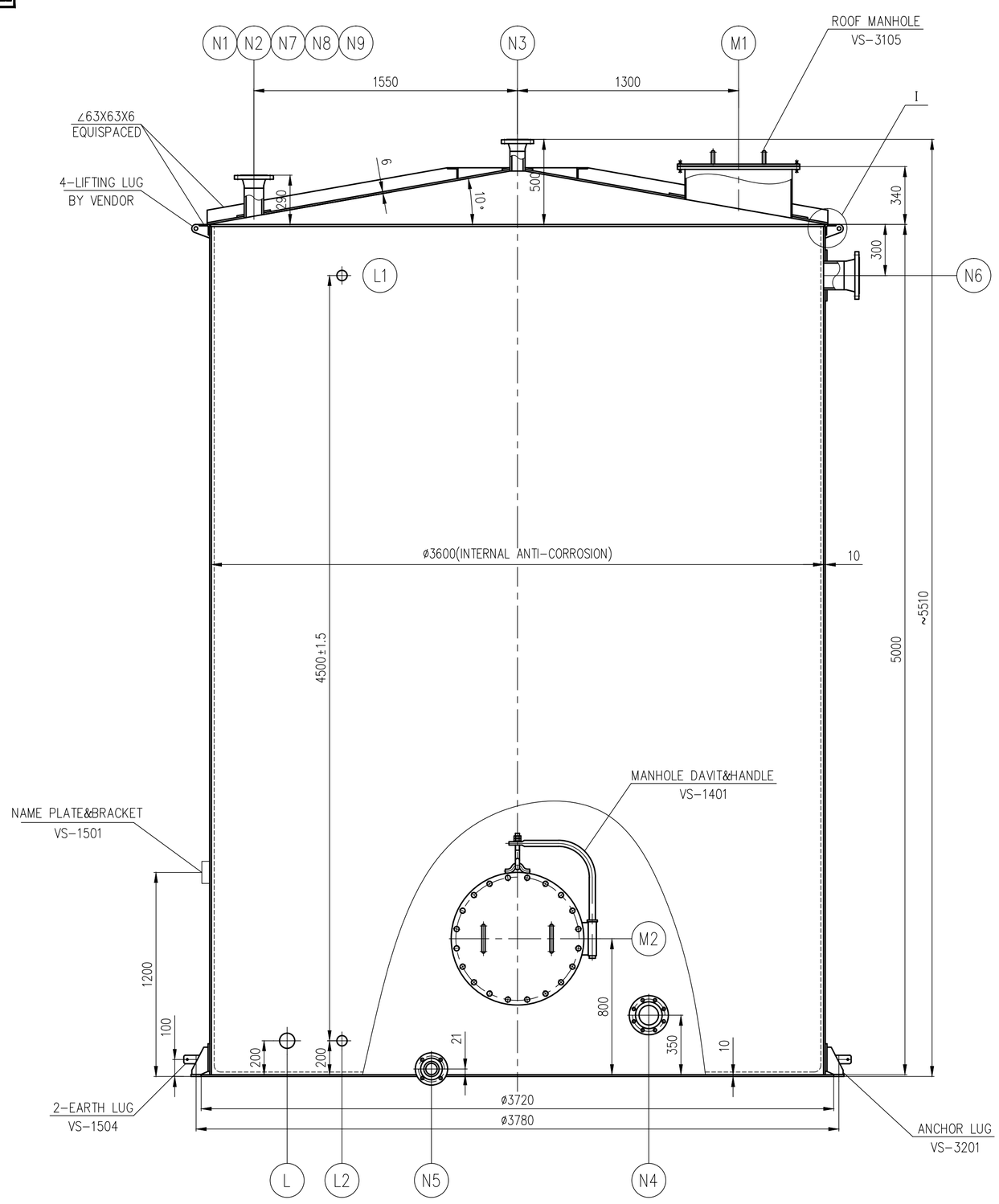

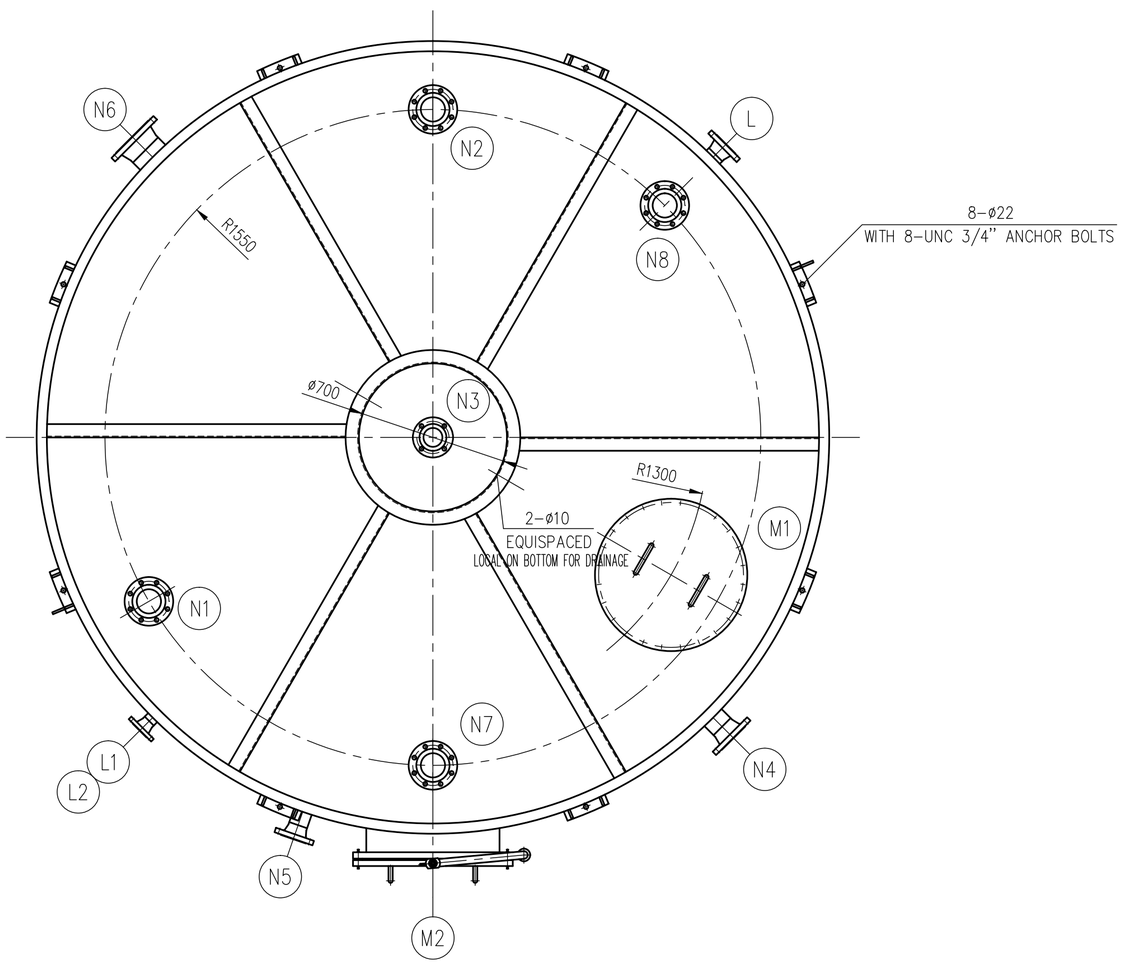

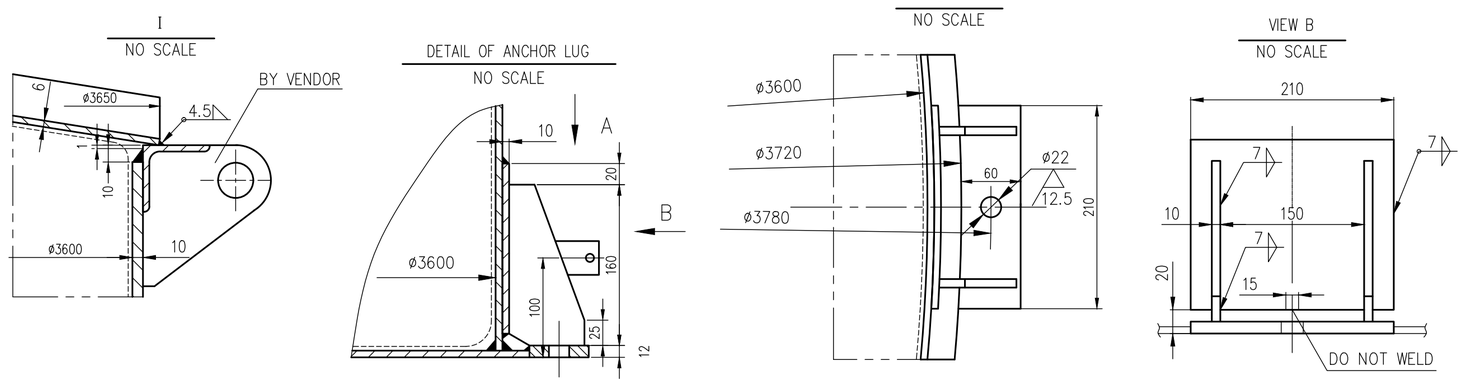

DESIGN DATA

DESIGN CODE	API-650 13TH EDITION APPENDIX J		
OPER. PRESSURE Pa(g)	ATM	APPLICABLE ANNEX OF API 650	☑A ☐B ☐D ☐E ☐F ☐H ☐M ☐P ☐S ☐V
DESIGN PRESSURE Pa(g)	FULL LIQUID LEVEL		
OPER. TEMP. °C	40	NDT: SHELL BUTT WELDS	☑ RT AS PER CODE ☐ UT AS PER CODE
DESIGN TEMP. °C	85	NDT: ANNULAR PLATE BUTT WELDS	☑ RT AS PER CODE ☐ UT AS PER CODE
LOWEST ONE-DAY MEAN TEMP. °C	0	NDT: SHELL TO BOTTOM WELDS	☑ MT AS PER CODE ☐ PT AS PER CODE
MEDIUM NAME	Scrubbing water(NOTE 3)	TEST: BOTTOM PLATE	VACUUM-BOX WITH 35 kPa
MEDIUM DENSITY kg/m3	1000	TEST: ROOF PLATE	VACUUM-BOX WITH 35 kPa
LETHAL SERVICE	☐YES ☑NO	TEST: HYDRO-TEST	☑ YES ☐ NO
CORROSION ALLOWANCE mm	SHELL: 1.7 BOTTOM: 1.7	HYDRO-TEST LEVEL m	5
	ROOF: 1.7 ROOF FRAME: /	PWHT	–
	ANCHOR BOLTS: 3.0 ANCHOR CHAIR: 2.0	BREATH VALVE ACT PRES. Pa	–
SHELL JOINT EFFICIENCY	0.85	NEGATIVE SETTING P. FOR B.V. Pa	–
SHELL DESIGN	/	INSULATION MATERIAL	–
WIND LOAD	NOTE 1	INSULATION THICKNESS mm	–
SEISMIC LOAD	NOTE 2	FABRICATION WEIGHT kg	–
BASIC SNOW LOAD Pa	–	INSTALL WEIGHT kg	7910
LIVE LOAD Pa	/	OPERATION MASS kg	–
FILLING COEFFICIENT	/	MASS OF FULL OF WATER kg	58810
TOTAL VOLUME m³	50.9	DESIGN SERVICE LIFE YEAR	20

SPECIFICATION

1. SAPKT-EQ-SPE-0005 Rev.0 <SPECIFICATION FOR STORAGE TANK>
2. SAPKT-QC-BED-0002 Rev.0 <SPECIFICATION FOR GENERAL WELDING AND NDE REQUIREMENT FOR PRESSURIZED EQUIPMENT>.
3. APPENDIX 10.1.8 <SPECIFICATION FOR VESSELS, TANKS AND TOWERS>.
4. SAPKT-EQ-SPE-0045 Rev.0 <ENGINEERING SPECIFICATION OF MECHANICAL EQUIPMENT>
5. SAPKT-EM-SPE-0050 Rev.0 <ENGINEERING SPECIFICATION OF MECHANICAL EQUIPMENT>
6. T24B25-MC07-01 <SPECIFICATION FOR PAINTING>.

GENERAL REQUIREMENTS:

1. ALL WELDS SHALL BE CONTINUOUS EXCEPTED AS NOTED.
2. DIMENSION TOLERANCES SHALL BE COMPLIED WITH ENGINEERING SPECIFICATION FOR ATMOSPHERIC TANK AND API 650, IF THE REQUIREMENTS OF ENGINEERING SPECIFICATION ARE IN CONFLICT WITH API 650, THE STRICTER OF THE TWO REGULATIONS SHALL BE FOLLOWED.
3. LOW-HYDROGEN ELECTRODES SHALL BE USED FOR ALL WELDS IN ANNULAR PLATE AND SHELL COURSES, INCLUDING THE BOTTOM SHELL COURSE TO ANNULAR PLATE.
4. THE FACE OF THE FLANGES SHALL BE WELDED TO THE NECK WITH A J" PREPARATION GROOVE WELD THE DEPTH OF THE GROOVE SHALL NOT BE LESS THAN THICKNESS OF THE NOZZLE NECK TO WHICH THE FLANGE IS ATTACHED.THE FACES OF THE SLIP-ON FLANGES ARE TO BE MACHINED AFTER WELDING TO THE NOZZLE NECK.
5. THICKNESS INDICATED ON DRAWING ARE PROPOSED VALUE, VENDOR SHALL CHECK AND GUARANTEE THEM ON STRENGTH.
6. INTERNAL ANTI-CORROSION OF THE EQUIPMENT SHALL COMPLY WITH THE PROVISIONS OF THE PROJECT.

NOTE:

1. WIND CONDITION: ASCE 7-2016(EXPOSURE CATEGORY: C,RISK CATEGORY: III), DESIGN WIND SPEED: 120Km/Hr;
2. SEISMIC CONDITION: ASCE 7-2016(CLASS E,IMPORTANT FACTOR 1.25,SS=0.198g,S1=0.1323g)
3. MEDIUM COMPOSITION: PRIMARILY WATER, SMALL AMOUNTS OF NaCl AND NH4Cl.

NOZZLE LIST

MARK	SIZE NPS	SCH.OR THK.	CLASS	FLANGE STD	TYPE	FACE TYPE	SERVICE	NOZ. PROJ. FROM C.L	REMARK
N1	3"	Sch160	150#	ASME B16.5-2020	WN	RF	Wash Water inlet	SEE DWG.	
N2	2"	Sch160	150#	ASME B16.5-2020	WN	RF	Demineralized water inlet	SEE DWG.	
N3	3"	Sch160	150#	ASME B16.5-2020	WN	RF	Vent	SEE DWG.	
N4	3"	Sch160	150#	ASME B16.5-2020	WN	RF	Wash Water outlet	2010	
N5	2"	Sch160	150#	ASME B16.5-2020	WN	RF	Drain	2010	
N6	3"	Sch160	150#	ASME B16.5-2020	WN	RF	Overflow nozzle	2010	
N7	3"	Sch160	150#	ASME B16.5-2020	WN	RF	Weak ammonia water inlet	SEE DWG.	
N8	3"	Sch160	150#	ASME B16.5-2020	WN	RF	Weak ammonia water inlet	SEE DWG.	
N9	2"	Sch160	150#	ASME B16.5-2020	WN	RF	Waste Dilute Liquid Inlet	SEE DWG.	
HOLD L	3"	Sch160	150#	ASME B16.5-2020	WN	RF	Remote liquid level gauge nozzle	1960	
HOLD L1,2	2"	Sch160	150#	ASME B16.5-2020	WN	RF	Local level gauge nozzle	1960	
M1	24"	/	/	/	/	/	Manhole	SEE DWG.	
M2	24"	Thk.10	150#	ASME B16.5-2020	SO	RF	Manhole	2010	

MATERIAL LIST

SHELL/HEAD	A283 Gr.C	SADDLE or LEGS/PAD	/
NOZZLE FLANGE	A105	STUDS/NUTS	A193 Gr.B7/A194 Gr.2H
NOZZLE NECK PIPE	A106 Gr.B	NAMEPLATE/BRACKET	A240 TYPE 304/A283 Gr.C
NOZZLE NECK FORGED	/	INSULATION/FIREPROOFING SUPPORT	-/-
NOZZLE NECK PLATE	A283 Gr.C	ANCHOR LUGS	A283 Gr.C
NOZZLE GASKET	RPTFE	ANCHOR BOLTS	A307 Gr.B
BODY FLANGE	/	LIFTING LUG	A283 Gr.C
BODY GASKET	/	EARTH LUG	A240 304

REV.	DESCRIPTION	DATE	DESIGN	DRAW	CHECK	REVIEW	APPROVE
A							
A							
A	IFD	11-03-2025	KSL		LZQ		

THIS DOCUMENT IS THE PROPERTY OF TCC. NO PART OF THIS DOCUMENT SHALL BE REPRODUCED OR DISCLOSED TO OTHERS OR USED FOR ANY PURPOSE WHATSOEVER EXCEPT WITH THE PRIOR WRITTEN PERMISSION OF TCC.

TCC 中国天辰工程有限公司 CHINA TIANCHEN ENGINEERING CORPORATION

PROJECT	PKT 300KTA Soda Ash Project
UNIT	Filtration Section
PHASE	Detail Design
DWG NO.	T24B25-512-FE8D-0700

512-V-07 Scrubbing Water Tank

SCALE 1:20 | SHEET 1 | TOT. 1

Counter Signing	Sign	Date